GOOSE CREEK CUBMOBILE DERBY CONSTRUCTION RULES

General

1. Please read all of the construction rules carefully before beginning to construct your Cubmobile. Failure to follow all of the following rules will automatically disqualify your Cubmobile.
2. Cubmobiles shall be constructed of wood. Structural components (frame, axles, and seat back support) shall be made of 2” x 4” construction grade dimensional lumber, the lumber shall be structurally sound and free from splinters. The seat, seat back, and seat back support braces shall be made from plywood and the plywood shall be at least 3/8” thick.
3. The seat shall be at least 15 inches by 20 inches and shall be affixed to the frame in at least two places. The seat back shall be at least 8 inches by 20 inches and attached to the seat back support in at least two places. The seat back support shall be braced on both sides of the frame.
4. Steering is done with the feet, which are braced on the front axle, on a pivoting front axle. <u>There should be no steering guide ropes</u>. (The rope kind of implies that you steer with it, but really Scouts have much better control with just their feet and the rope causes more problems for them than it helps. Without the ropes Scouts learn to steer much quicker and holding on to the break helps them stop in a panic instead of using their feet.)
5. The front axle shall have steering limit blocks affixed to it. The steering limit blocks shall be securely affixed to the front axle with screws, and shall be no further than 1/2 inch from the main frame. The steering axle bolt shall be at least 3/8 inch in diameter, shall be at least 4½ inches long, and shall have two nuts or a lock nut.
6. Cubmobiles must be equipped with an adequate safety belt securely fastened to the frame of the car.
7. Cubmobiles must be equipped with a handbrake with its rubbing surface faced with a rubber material such as a strip from an old tire. This will stop the car when dragged on the ground. The (hand) brake shall be mounted with a 3/8 inch or larger bolt.
8. Cubmobile components shall NOT be joined with nails (they will not hold and the Cubmobile will not be safe – therefore not allowed to race). Structural components shall be joined with metal; screws, lag screws, or lag bolts.
9. Cubmobiles built in previous years **<u>may</u>** be used for this year’s derby.

<u>Recommendations and building hints</u>:

1. Use a spring to hold the brake lever up.
2. Correct alignment will go a long way toward a successful race – that includes wheels that do not wobble (much).
3. Use good materials – don’t buy the cheapest wood.
4. Don’t ‘eyeball’ your cuts and drill holes – “measure twice – cut once”.

5. Reinforce the rear axle (to stop it from moving at all) – even a little movement here could make steering very difficult.
6. Double the brake, for if you use a single sided brake shown in the How-To-Book and most web site plans, the car will turn when the brake is applied. Double the brake by using the double brake method. You may make the double brake from wood or steel.
7. Put in foot pads to hold the boys feet during the race so they cannot put their feet down.

Size

1. The overall length of the car is a maximum of 5 feet.
2. Cubmobiles shall have a forty-eight (48) inch wheel base as measured from the center of the front wheels to the center of the back wheels.
3. Cubmobile axles shall be 28 inches (not counting the wheel mounting hardware or wheels).

Weight

1. The maximum weight of the Cubmobile (empty) may not exceed 45 lbs.

Wheels and Axles

1. Wheels shall be no smaller than 7 inches and no larger than 10 inches in diameter.
2. Wheels shall be constructed of solid rubber (no inflatable tires). Wheels may have bearings if desired.
3. The rubber on the wheels may not be modified (i.e. shaved, thinned, narrowed, …).
4. Wheels must be attached to the car using lag screws. Metal rods that extend the width of the car and connect wheels are prohibited. Lag screws must be at least 3/8 inch in diameter and must be at least 3½ inches long. Wheel mounting hardware may not rotate during racing. Anti-rotation may be accomplished using glue, U-bolts or other secure means
5. Spoked wheels are not allowed unless they have a hub covering them.

<u>Recommendations and building hints</u>:

1. We highly recommend that wheels with bearings be used. Plastic mower wheels without bearings will many times not even get the Cubmobile all the way down the hill!
2. Web site for wheels: ***www.nmpcomtech2000.com/cub_scouts.htm***

   In 2011, cost of the 4 wheel kit with covers and bolts was $46.75 including delivery. Subtract $3 if paying by check. Delivery time was five business days.

GOOSE CREEK CUBMOBILE DERBY CONSTRUCTION RULES

Decorations

1. Additions to the design may be made for appearance/decoration as long as they do not impact the basic construction rules or create safety issues.
2. No objects can be attached to the car that may impale a driver or pedestrian.
3. Be sure that any writing on the car is done with BSA values.

SAMPLE PLAN

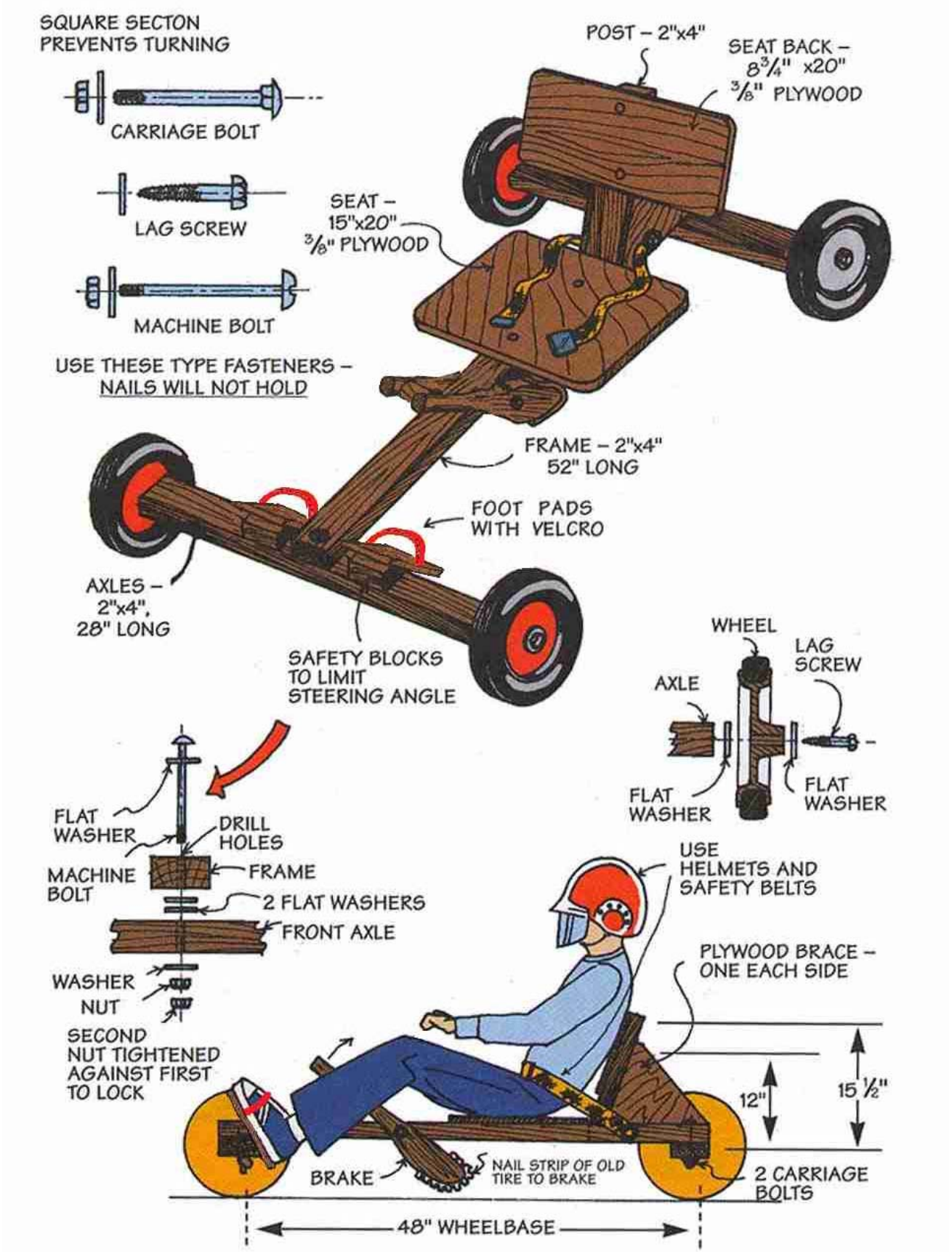
SQUARE SECTON PREVENTS TURNING
CARRIAGE BOLT
LAG SCREW
MACHINE BOLT
USE THESE TYPE FASTENERS – NAILS WILL NOT HOLD
POST – 2"x4"
SEAT BACK – 8¾" x20" ⅜" PLYWOOD
SEAT – 15"x20" ⅜" PLYWOOD
FRAME – 2"x4" 52" LONG
FOOT PADS WITH VELCRO
AXLES – 2"x4", 28" LONG
SAFETY BLOCKS TO LIMIT STEERING ANGLE
WHEEL
LAG SCREW
AXLE
FLAT WASHER
FLAT WASHER
FLAT WASHER
DRILL HOLES
MACHINE BOLT
FRAME
2 FLAT WASHERS
FRONT AXLE
WASHER
NUT
SECOND NUT TIGHTENED AGAINST FIRST TO LOCK
USE HELMETS AND SAFETY BELTS
PLYWOOD BRACE – ONE EACH SIDE
12"
15 ½"
BRAKE
NAIL STRIP OF OLD TIRE TO BRAKE
2 CARRIAGE BOLTS
48" WHEELBASE

SAMPLE PLAN

These instructions along with the detailed diagram on the previous page should give you the tools, parts, and assembly steps required to create your own Cubmobile. Enjoy!!!

1. Cut (1) 2x4 52" long for main frame.
2. Cut (2) 2x4's 28" for the front and back axles.
3. Make an "X" on each end of each axle, and drill a 5/16” hole at each "X" intersect, 4-6" deep using an electric or cordless drill.
4. On the front axle 2x4:
    a. Drill a 3/8" hole at center of 2x4. This would be 14” from either end and 1-5/8” from either long side.
    b. Attach (2) 2x4 blocks to front axle, on either side, 2-1/8" from center hole, (4) #6 x 2" screws per block. This will limit steering. This step can also happen after step 6 and simply allow 1/4” – 1/2” space between the blocks and the main 2x4.
5. At front of main frame 2x4, drill a 3/8" hole (centered and 1-5/8" from front).
6. Attach front axle to frame using 3/8" x 4" hex bolt, (4) 3/8” flat washers, and (1) 3/8” lock nut. (Adjust tightness to allow steering to operate freely).
7. Align the back axle 2x4 at 90 degrees right angle with back of main frame 2x4, clamp if possible. Drill (2) 5/16" holes diagonally from each other through axle and main frame. Attach main frame to back axle using (2) 5/16” x 4” carriage bolts, (2) 5/16” flat washers, (2) 5/16” split lock washers, and (2) 5/16” nuts. The second nut works to lock the other nut in place thus preventing the assembly from loosening up during use. If this is to be a permanent attachment, glue also.
8. Cut out seat and back rest from plywood. Seat bottom is 15” x 20”, back is 8 3/4” x 20”
9. Cut one 2x4 12-14" in length for back rest support. (Bevel slightly about 10 degrees if possible).
10. Attach back rest support (bevel end down) to main frame using (2) #8 x 3” screws. These will need to be positioned about 1.5” from bottom of the back support board and then angled downward at about 45 – 60 degrees to properly engage the main 2x4. Length of the long side of the back support depends on size of the boys. The position of the back support along the main 2x4 depends on the size of the driver. Have an average-height Scout team member sit on the 2x4 frame to estimate the position so that his feet comfortably reach the steering axle with knees slightly bent.

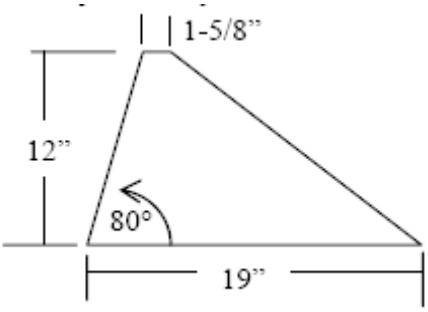

SAMPLE PLAN

11. Cut out 2 triangular shaped pieces of plywood and attach to either side of backrest support and main frame with glue and screws (#6 1-1/2"). Drilling small pilot holes helps.
12. Attach seat and back rest using (2) 1/4-20 x 3” carriage bolts, (1) 1/4” flat washer, (1) 1/4” split lockwasher, and (1) 1/4” hex nut.
13. Cut 2x2 surveyor's stake to 14-16" at an angle, cover end with rubber (old tire etc.) using #4 x 1” screws and #4 fender washers, drill a 3/8" hole through stake at location it will meet main frame. Note: Hole should be drilled closer to the rubber end to allow handle end to be heavier so that it will return on its own once the boys let it go after breaking. Alternative: Use a spring to hold the brake up.
14. Drill hole 5/16" into main frame at point to attach brake. Mount the brake using a 3/8" x 4" lag screw with two 3/8” flat washers on either side of the handle so that it actuates smoothly.
15. Drill and attach the seat belt with fasteners of choice. We used a 3/8” x 6” hex bolt and drilled right through both support boards behind the seat back support.
16. Attach wheels using (4) 3/8” washers (2 on either side of wheel) and a 3/8" x 6" lag screw. (Socket wrench or impact gun really helps here!).

SAMPLE PLAN

Supplies and Tools:

Qty	Description	Tools List
4	8" wheels (solid rubber only! No pneumatics)	• Power drill x 2 • 3/32”,7/64”, 1/4”,5/16” and 3/8” wood bits, countersink bit • 5/8” and 9/16” Wrenches or deep socket set • Screwdriver/Driver bits • Tape measurer • Wood glue • Power or hand saw • Framing Square • Hammer • 4” clamps (quick or bar) • Safety Glasses
1	2' x 4' " plywood	
2	2x4x8	
1	2"x2" surveyor's stake (brake handle)	
4	3/8" x 6" lag screws (for wheels)	
1	3/8" x 4" hex bolt (for front axle)	
1	3/8" x 4" lag screw (for brake)	
2	5/16" x 4" carriage bolts (for rear axle)	
24	3/8" washers	
1	3/8" lock nut	
2	5/16" washers	
2	5/16" lock washers	
4	5/16" nuts	
32	#6 x 1 1/2" wood screws	
8	#6 x 2" sheetrock or wood screws	
16	#6 x 1-5/8” sheetrock or wood screws	
1	seat belt (from auto salvage yard or Fork lift shop)	
1	2" x 6" piece of rubber (from old tire)	
4	1/4-20 x 3” carriage bolts (seat back and bottom)	
4	1/4” flat washer	
4	1/4” lock washer	
4	1/4” hex nuts	
2	#4 x 1” wood screws	
2	#4 fender washers (around 1” outer diameter)	
2	#8 x 3” Sheetrock or wood screws	
2	2” x 4” piece of old bike tire or equivalent	